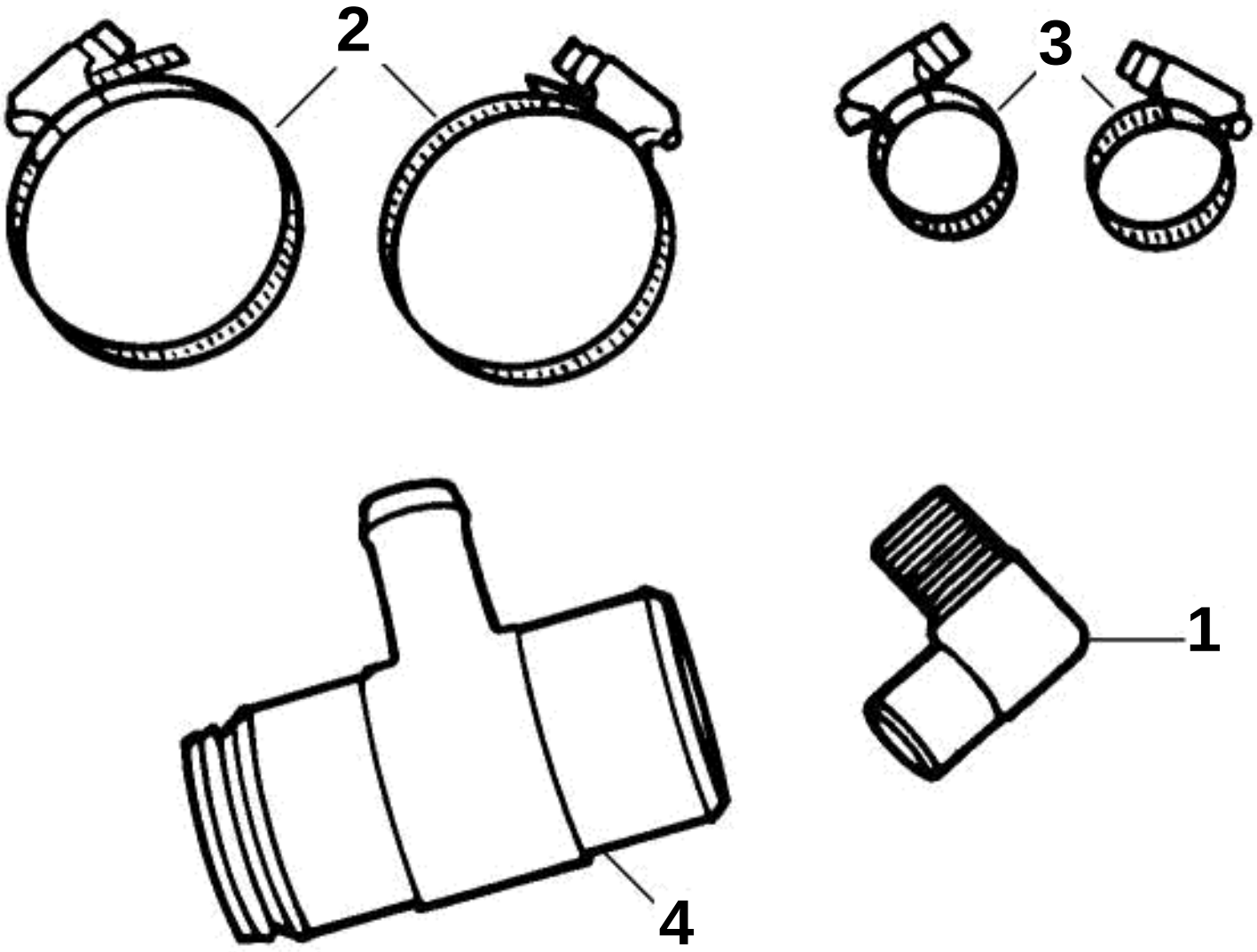
2
3
1
4

HOT WATER OUTLET KIT 3

REF	PART NO.	QTY	DESCRIPTION
	3856265	1	Hot water outlet, -6, V-8 Engines
1	856483	1	· Hose nipple
2	3852098	2	· Clamp
3	3853813	2	· Clamp
4	3855531	1	· T-pipe